| Dimensions | |
|---|---|
| Product dimensions (mm) | 180*91xH91mm |

## Scheme

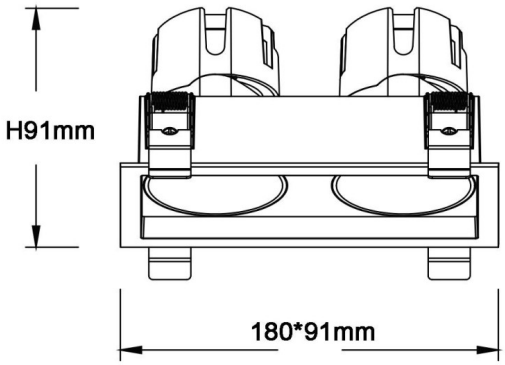


## Photometry

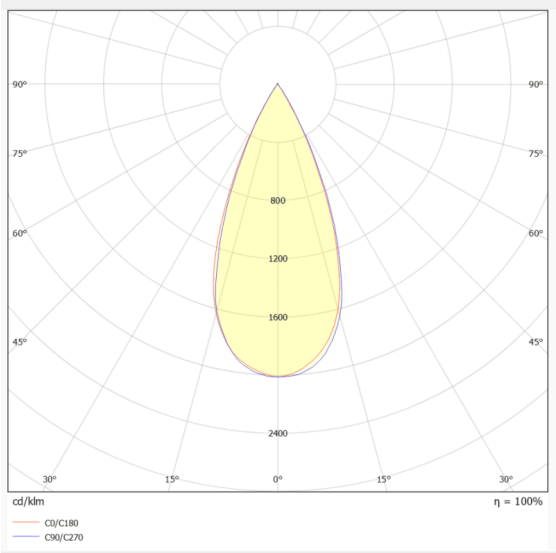


## ZENITH IP65SX2

| | |
|---|---|
| Item code | 86.D285.1333.02 |
| Product type | Indoor |
| Category | Downlights |
| Family | ZENITH |
| Subfamily | ZENITH IP65SX2 |
| Pictograms | 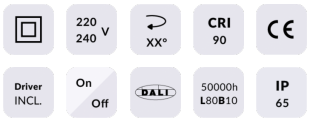 |



| Product | |
|---|---|
| Real power (W) | 2X12 |
| Real luminous flux (Lm) | 2X960 |
| Luminous efficiency (Lm/W) | 80 |
| Beam angle (º) | 36 |
| Life time (h) | 50000 h L80B10 |
| IP | 65 |
| U. G. R | 19 |
| Control gear | DALI |
| Colour temperature (K) | 3000 |
| Colour consistency (SDCM) | SDCM3 |
| CRI | 90 |